FINAL PERFORMANCE REPORT APPENDIX

APPENDIX

Vermont Agency of Agriculture, Food and Markets

AMS Agreement: 16-SCBGP-VT-0005

Gina Clithero, Agriculture Development Specialist

Agriculture Development Division

Phone: (802) 585-6225

Email: gina.clithero@vermont.gov

Submission: December 23, 2019

TABLE OF CONTENTS

Final Report Appendix - Design Iterations of the Spinner Kit

The above two images demonstrate early attempts to chop down and modify washing machines. The washer on the left was a modified GE washer I did in 2014 – 2015 (which still relied on the manufacturer's controls), and the image on the right shows a current era Whirlpool washer with all of the original washer controls removed.

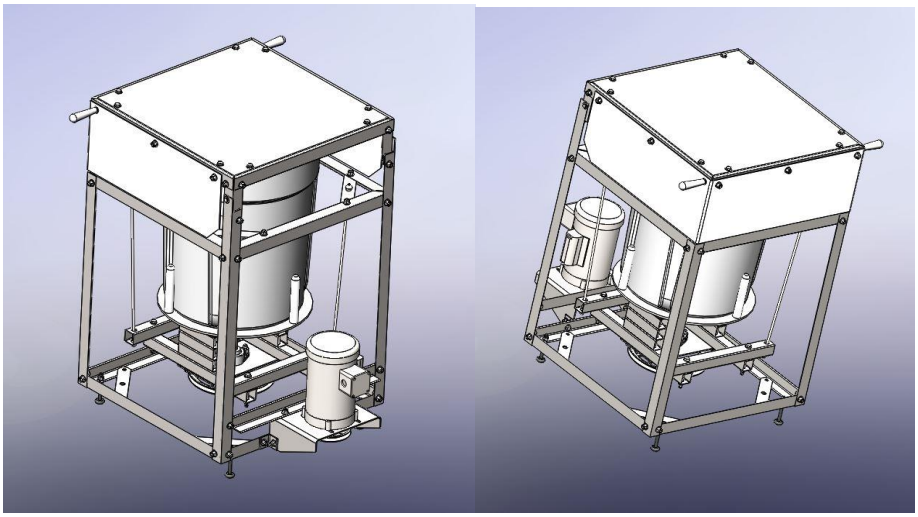

The first attempt made at a food grade spinner prototype resulted in the above model. I worked with a mechanical engineer, Max Keeling, who had experience in material handling and processing equipment, and we based many of our design elements on a washing machine.

The CAD model produced by the engineer was aimed at a realizing something ready for manufacture. I believed at the time that we needed to test individual elements before beginning to think about manufacturing, a problem I would continue to have while working with outside designers. The CAD model below is a simplification of the design so that I could build out and test some of the concepts.

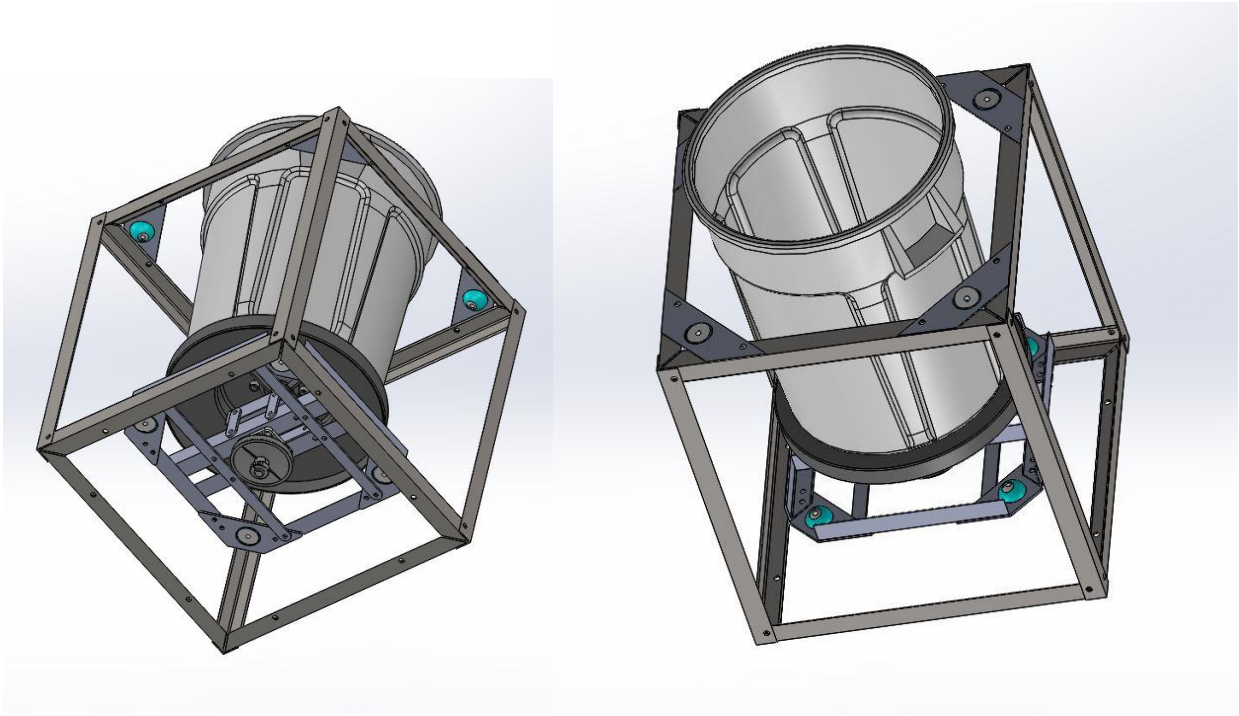

Shown above is the prototype that resulted from working with Max.

This initial prototype was promising – I was able to get the basket spinning up to high enough RPMs to dry salad greens, but the basket was spinning much too erratically (and violently) for a practical application. This design fully suspends the spinning components in the air; I liked this arrangement since it presents the easiest way to clean under the machine, but after a period of testing concluded that the machine's frame would need to be much more solid and stable.

Unfortunately, Max moved away from the area before we could continue our work together. I had some difficulty after Max's departure finding an engineering collaborator for the project, in all attempting to bring 3 different engineers onboard.

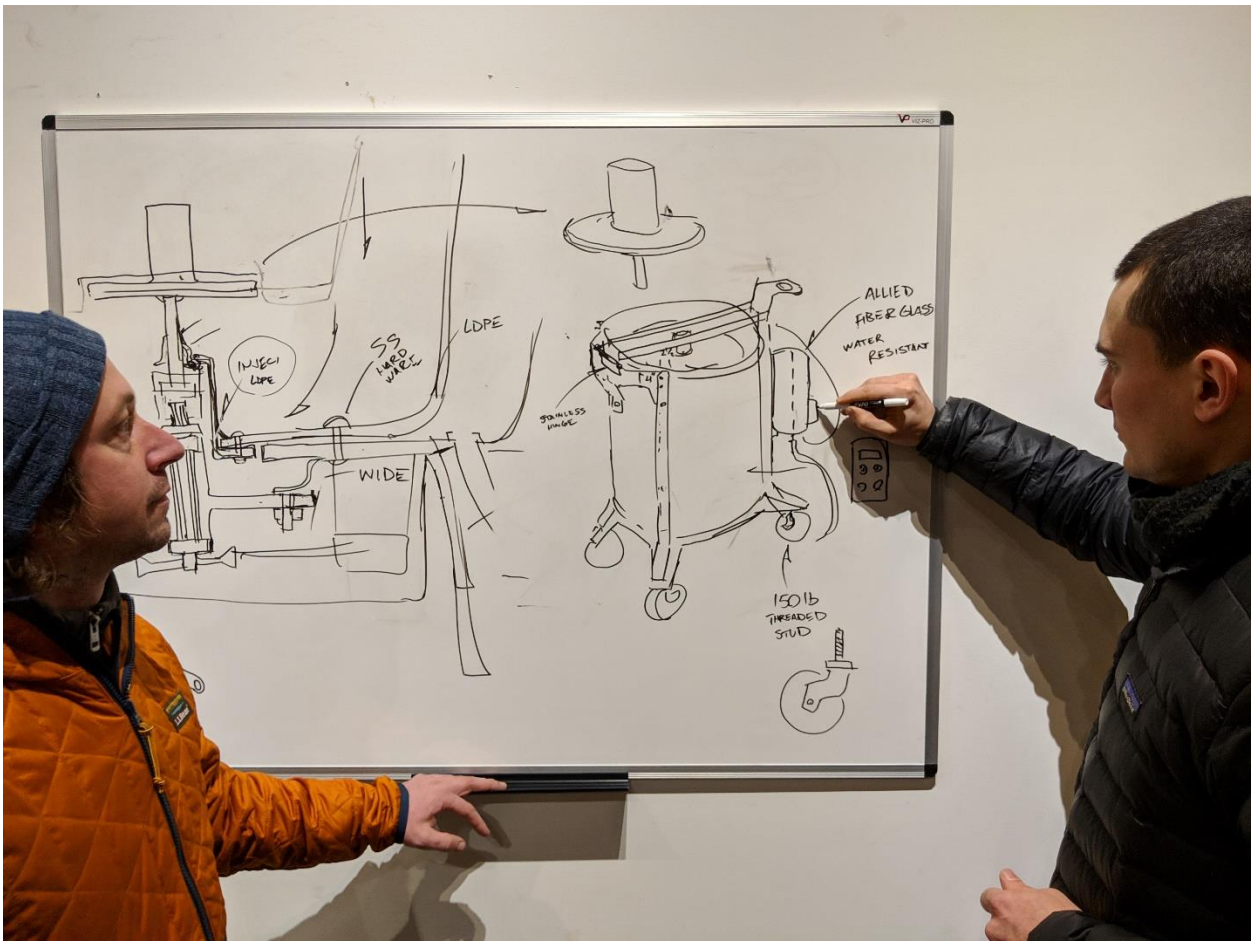

I began working in 2018 with a design firm trying to take the concept in a new direction – designing a solid frame and transmission without any of the suspension elements from the first prototype. The image above is from a whiteboard design meeting I had with Matt Flego from M + E Design in Burlington.

The above CAD model is the result of working with M + E Design. Again, this design firm produced a complex ‘final’ model with an eye towards manufacture – without ever first testing any of the unique design features in the real world.

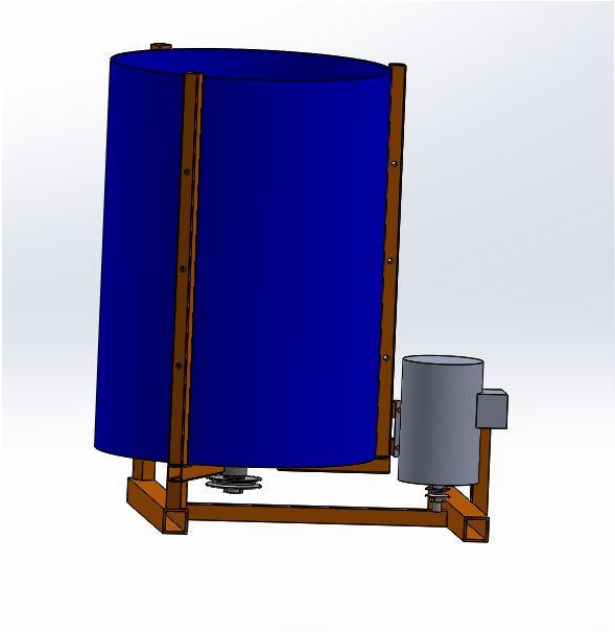

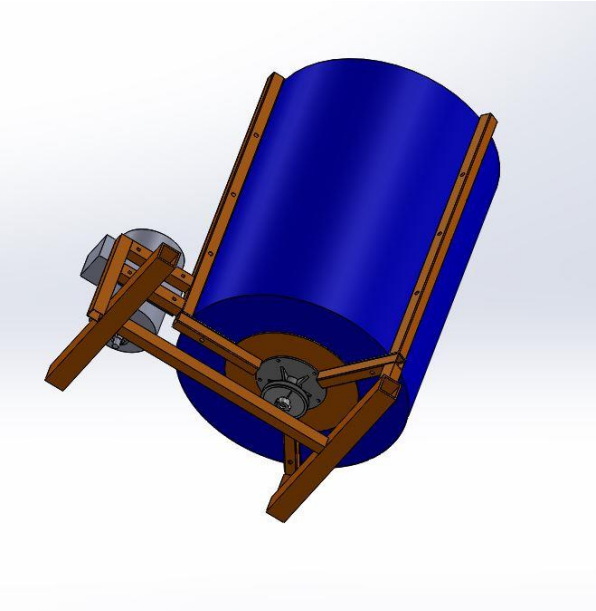

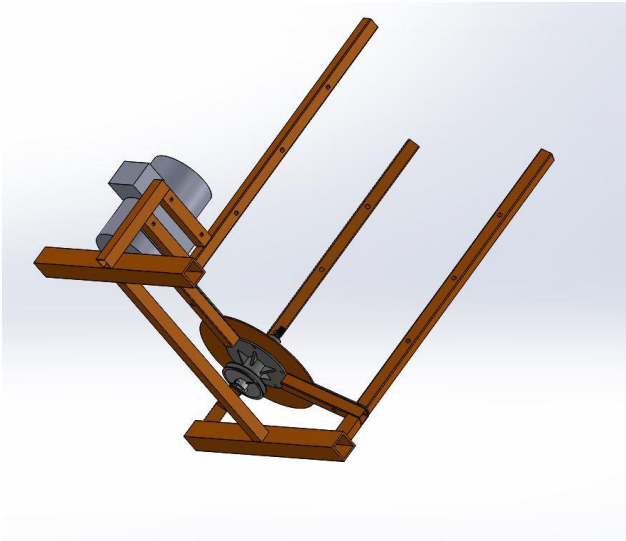

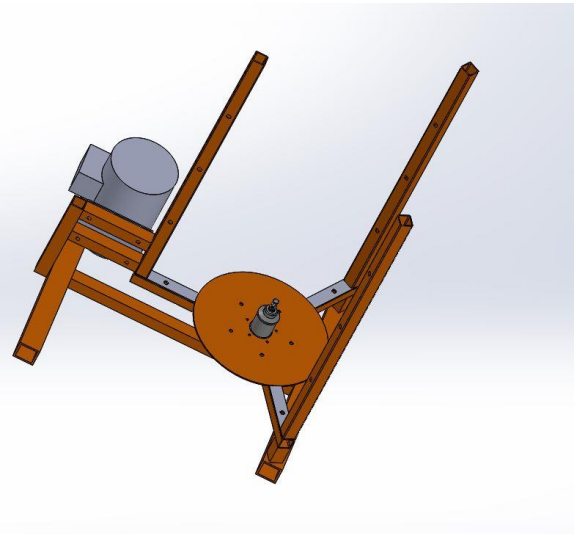

The above are CAD models simplifying the M + E design for testing.

Stages of producing the ‘suspension free’ proof-of-concept prototype. The lid rotates with the white barrel insert, and the whole assembly is then compressed down onto a rotating platter, analogous to the manner in which a part is held to rotate in a lathe. Although at low RPMs this design was initially far more promising than the ‘hanging’ basket configuration, the machine could not reach a stable spinning equilibrium and had no way to diffuse errant vibrations that would accumulate and eventually cause the entire assembly to bang around and begin to dance.

At higher RPMs the vibrations bent the drive shaft in seconds – a significant enough failure to require again a new design direction. I needed to reconsider adding suspension to the rotating elements. At this stage I had begun to realize how incredibly difficult it was to accelerate a load safely and smoothly up to the RPMs required for drying greens; still unable to move from alpha to beta prototype the project was well behind schedule.

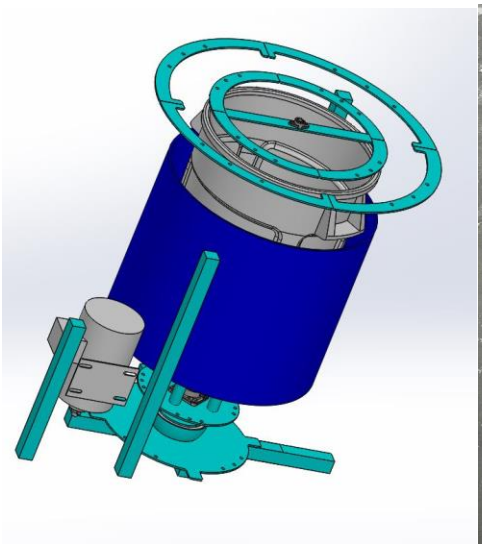


Above: Adding suspension in the form of springs to the lid. Below: Beginning to add spring suspension to the base of the shaft.


The result of testing the above prototype was incredibly discouraging… the vibration resulting from high RPMs was tremendously violent. The lid needed to be eliminated entirely from the design.


Above: First iteration of a ‘basket’ welded to the drive spindle which would capture and rotate the white drum insert. Note as well in the image on the right I began to use a 3-phase motor with a programmable controller, allowing me to slowly ramp up to full RPMs. Initial tests were again promising, but the vibration remained much too high to be tolerable. I began to incrementally experiment with altering the basket design to better hold the insert, rearranging the spring layout, and altering spring length, diameter, and strength.

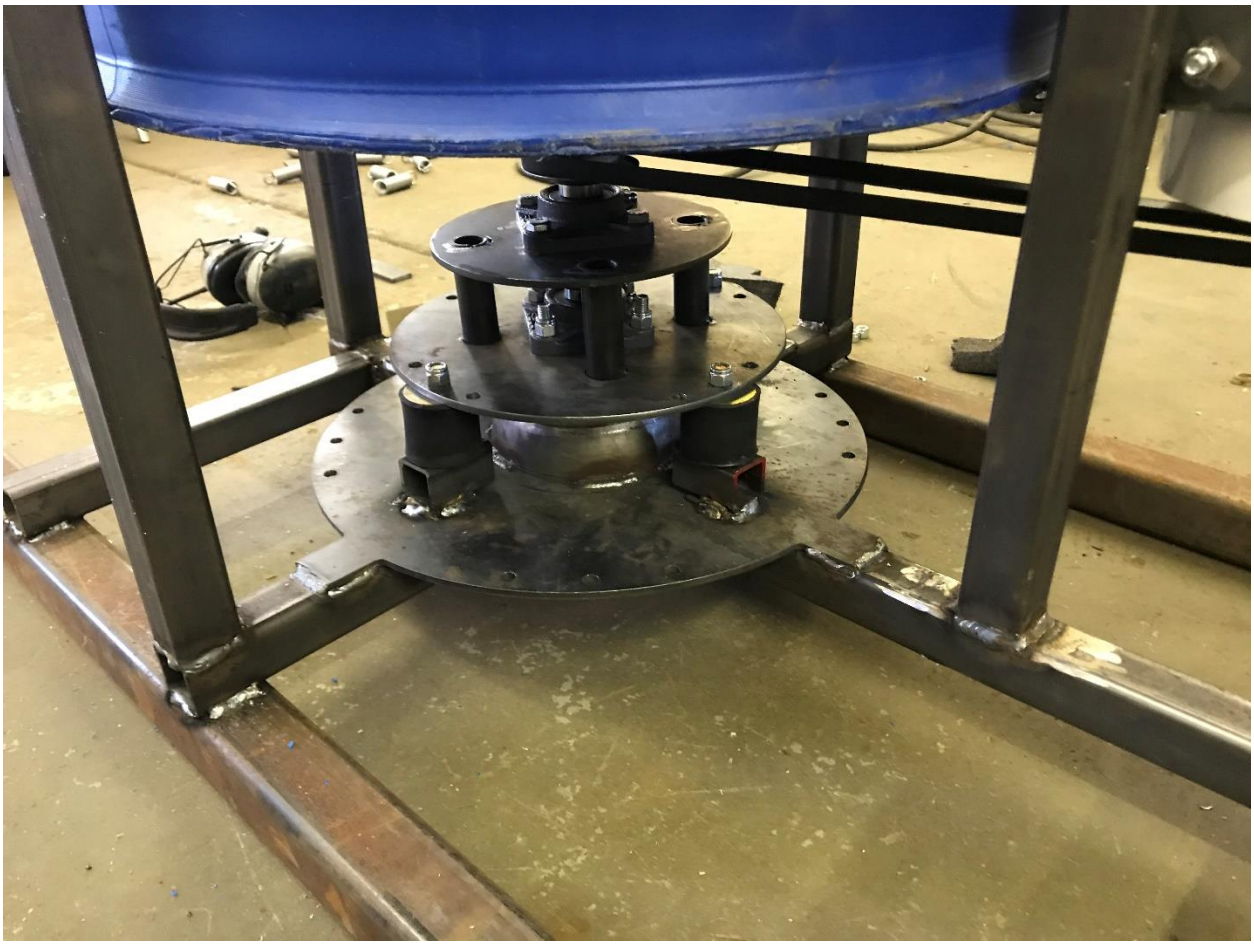

A small detour was made at one point to bolt the spindle frame down to vibration damping mounts. These thick rubber cylinders are used to absorb vibration in heavy-duty industrial equipment, but after some testing only seemed to make things worse. Still unable to hit a smooth and balanced spin, it began to seem possible that I would be unable to reach a point where I would ever be able to move from an alpha to a working beta prototype.

Above: Resizing the 3-phase motor (now in white) and adding more springs to the spindle base. After fully committing to this concept, a much slower process of trial-and-error had begun.

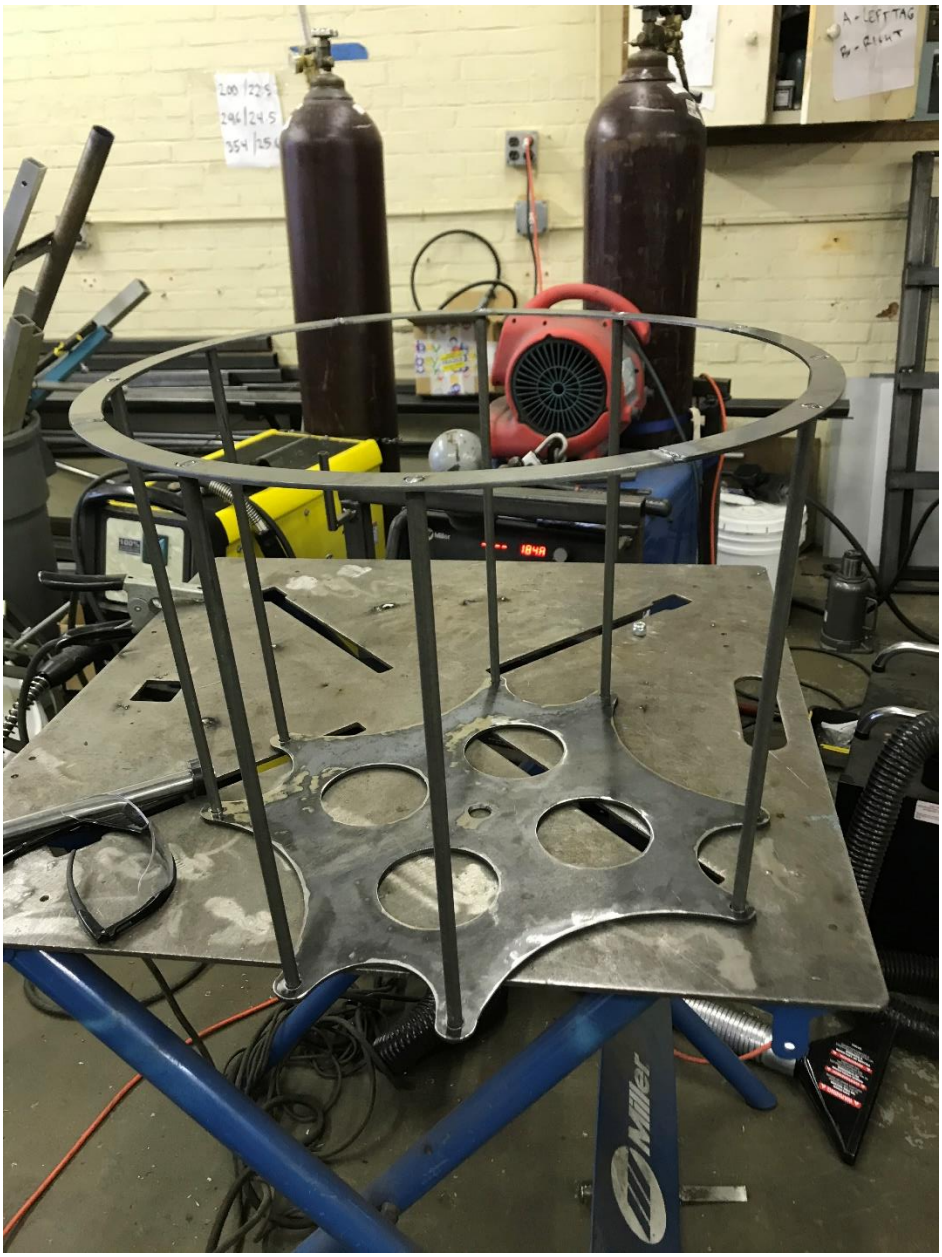

Back to the welding bench to continue modifying the spindle basket: the solution now seemed to be getting the insert to fit into the basket correctly.

Getting some of the first very smooth and reliable spins at high RPMs (or rather at the RPMs needed to dry greens). The suspension was now performing correctly, but the insert was still knocking around during ramp up and ramp down.

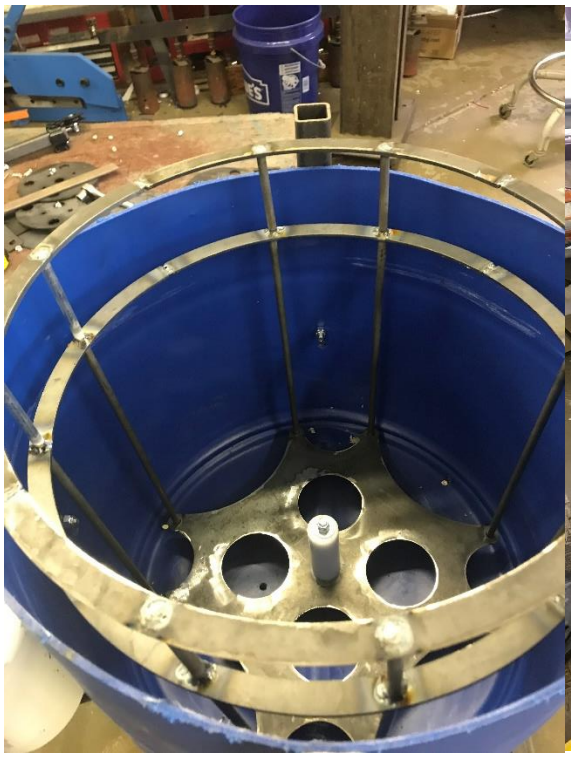


After making some final modifications to the basket (above left), a fully functioning alpha prototype (above right) was now ready to transition to in the field testing. It works! Below is the latest CAD model and completed beta prototype.

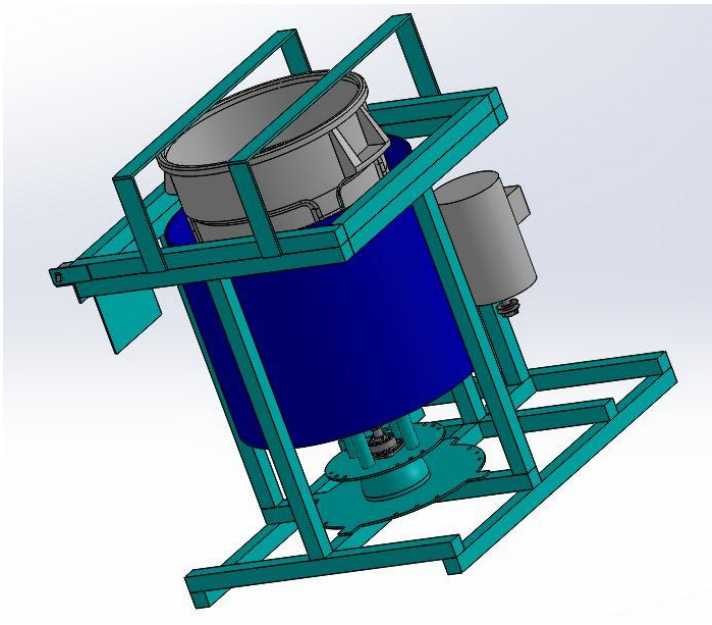


Loading the spinner with greens in the pack house.

Spinning arugula.

Growers who have seen this spinner in action are quite excited by it. This machine is far more robust than a washing machine and will have a much longer lifespan. Setup is simple and does not require complicated re-wiring. The machine reaches full speed more quickly, can spin at higher RPMs, and slows down from full speed to a complete stop in dramatically less time. **This machine can be cleaned out more quickly and much more thoroughly than a washing machine – perhaps the single biggest performance increase.**

Components List

Drive Train	price ea	Qty	Total	
motor	$ 124.94	1	$ 124.94	> $639 new
bearings	$ 29.25	2	$ 58.50	
shaft	$ 48.99	1	$ 48.99	
drive pulley	$ 10.52	1	$ 10.52	
drive belt	$ 10.99	1	$ 10.99	
shaft collars	$ 9.19	3	$ 27.57	
seal	$ 16.70	2	$ 33.40	
zerk fittings	$ 3.28	1	$ 3.28	
springs	$ 3.47	12	$ 41.60	
idler pulley	$ 12.10	1	$ 12.10	
motor pulley	$ 5.91	1	$ 5.91	
idler belt	$ 6.87	1	$ 6.87	
waterproof rubber boot	$ 28.77	1	$ 28.77	
hose clamps	$ 3.89	1	$ 3.89	
Steel				
stainless plate	$ 155.12	1	$ 155.12	
square tube	$ 1.71	62	$ 106.02	
steel plate (cnc plasma)	$ 50.00	1	$ 50.00	
total material cost		$ 311.14		
fabricated		$ 750.00		
Misc				
hinge	$ 10.33	1	$ 10.33	
hardware	$ 25.00	1	$ 25.00	
food grade plastic barrel	$ 84.39	1	$ 84.39	
Electronics				
motor controller	$ 159.50	1	$ 159.50	
timer	$ 23.83	1	$ 23.83	
safety switch	$ 8.99	1	$ 8.99	
wire	$ 6.00	1	$ 6.00	
wire harness	$ 6.00	1	$ 6.00	
emergency stop button	$ 5.50	1	$ 5.50	
	materials total		$ 1,058.01	
	fabricated base		$ 750.00	
	kit parts		$ 746.87	
	Total kit price		$ 1,496.87	

Current Price Breakdown: putting together the spinner in kit form will cost the end user $1496.87, a fully assembled model done in the shop will be closer to $2k. Items highlighted in yellow are good candidates for volume discounts. There are as of now 4 requests for kits; work has begun at my shop.

PROJECT 6: LEEK MOTH MONITORING AND MANAGEMENT STUDY

CONTINUED…

Figure 1&2 are photographs from a 2018 LM Field Day at the Horticultural Research Farm

Figure 1

Figure #2

Figure 3
Field planting of our Red Varietal Trial.

We presented our preliminary findings on Yellow Onions with UVM's Farmer Training Program (FTP) participants as part of our Entomology lesson. In return, some participants in the FTP program assisted our team in planting our red onion trial.

Figure 4&5
Flyers for two of our LM field days (2017-2018):

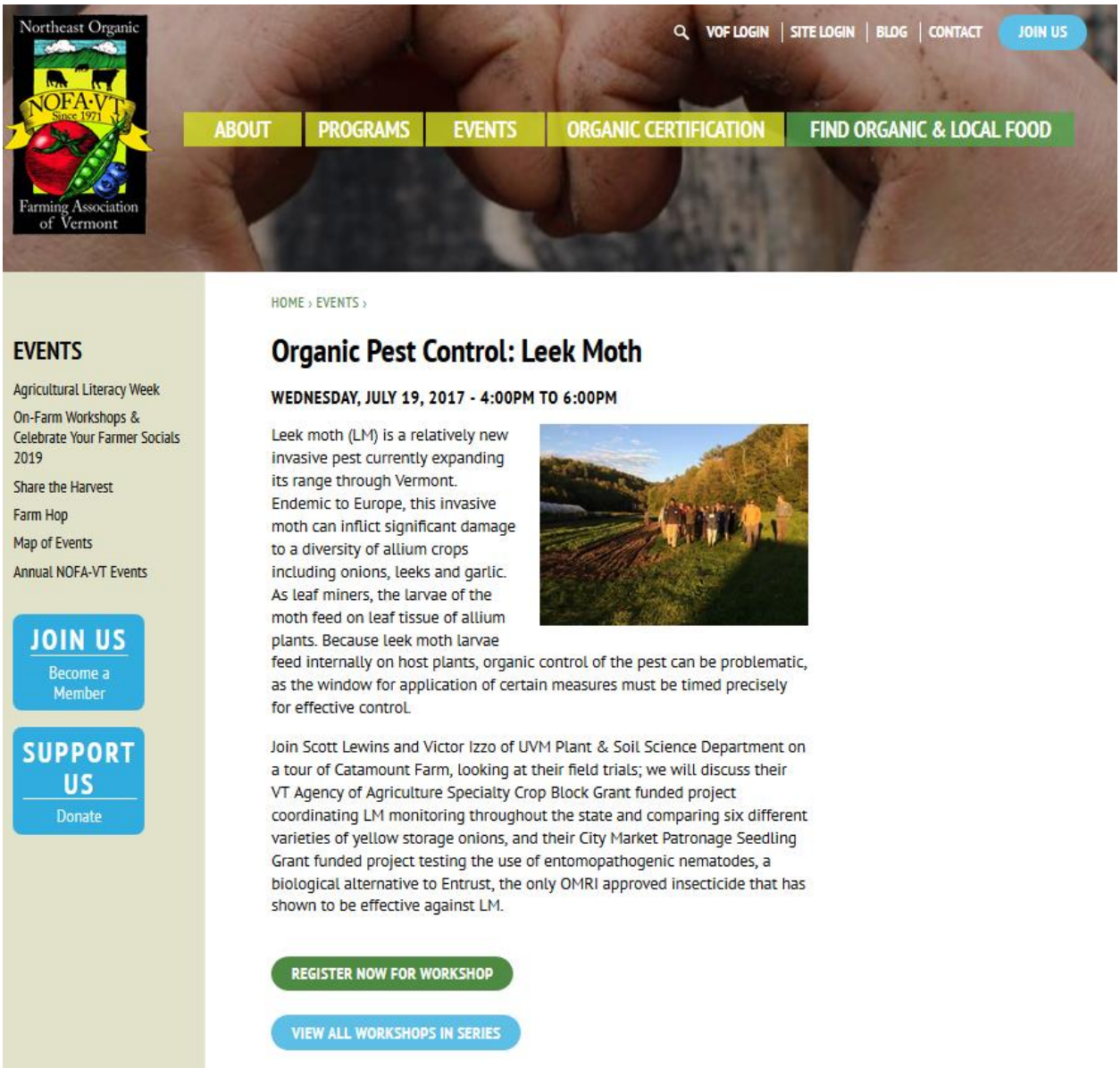

Northeast Organic Farming Association of Vermont NOFA·VT Since 1971

VOF LOGIN | SITE LOGIN | BLOG | CONTACT JOIN US

ABOUT PROGRAMS EVENTS ORGANIC CERTIFICATION FIND ORGANIC & LOCAL FOOD

HOME › EVENTS ›

EVENTS

Agricultural Literacy Week

On-Farm Workshops & Celebrate Your Farmer Socials 2019

Share the Harvest

Farm Hop

Map of Events

Annual NOFA-VT Events

JOIN US
Become a Member

SUPPORT US
Donate

Organic Pest Control: Leek Moth

WEDNESDAY, JULY 19, 2017 - 4:00PM TO 6:00PM

Leek moth (LM) is a relatively new invasive pest currently expanding its range through Vermont. Endemic to Europe, this invasive moth can inflict significant damage to a diversity of allium crops including onions, leeks and garlic. As leaf miners, the larvae of the moth feed on leaf tissue of allium plants. Because leek moth larvae feed internally on host plants, organic control of the pest can be problematic, as the window for application of certain measures must be timed precisely for effective control.

Join Scott Lewins and Victor Izzo of UVM Plant & Soil Science Department on a tour of Catamount Farm, looking at their field trials; we will discuss their VT Agency of Agriculture Specialty Crop Block Grant funded project coordinating LM monitoring throughout the state and comparing six different varieties of yellow storage onions, and their City Market Patronage Seedling Grant funded project testing the use of entomopathogenic nematodes, a biological alternative to Entrust, the only OMRI approved insecticide that has shown to be effective against LM.

REGISTER NOW FOR WORKSHOP

VIEW ALL WORKSHOPS IN SERIES

HOME › EVENTS ›

EVENTS

Agricultural Literacy Week
On-Farm Workshops & Celebrate Your Farmer Socials 2019
Share the Harvest
Farm Hop
Map of Events
Annual NOFA-VT Events

JOIN US
Become a Member

SUPPORT US
Donate

Organic Pest Control Study: Leek Moth

WEDNESDAY, JULY 18, 2018 - 4:00PM TO 6:00PM

Leek moth (LM) is a relatively new invasive pest currently expanding its range through Vermont. Endemic to Europe, this invasive moth can inflict significant damage to a diversity of allium crops including onions, leeks and garlic. As leaf miners, the larvae of the moth feed on leaf tissue of allium plants. Because leek moth larvae feed internally on host plants, organic control of the pest can be problematic, as the window for application of most measures must be timed precisely for effective control.

Join Scott Lewins and Victor Izzo of UVM Plant & Soil Science Department on a tour of Catamount Farm, looking at their field trials. They will discuss their VT Agency of Ag. Specialty Crops Block Grant funded project coordinating LM monitoring throughout the state and comparing six different varieties of red storage onions, and using the egg parasitoid Trichogramma to manage LM during vulnerable periods of the season.

REGISTER HERE

VIEW ALL WORKSHOPS IN SERIES